Oct. 31, 1939. N. T. GORDON 2,177,710

FLUORESCENT SIGN LAMP

Filed April 22, 1938

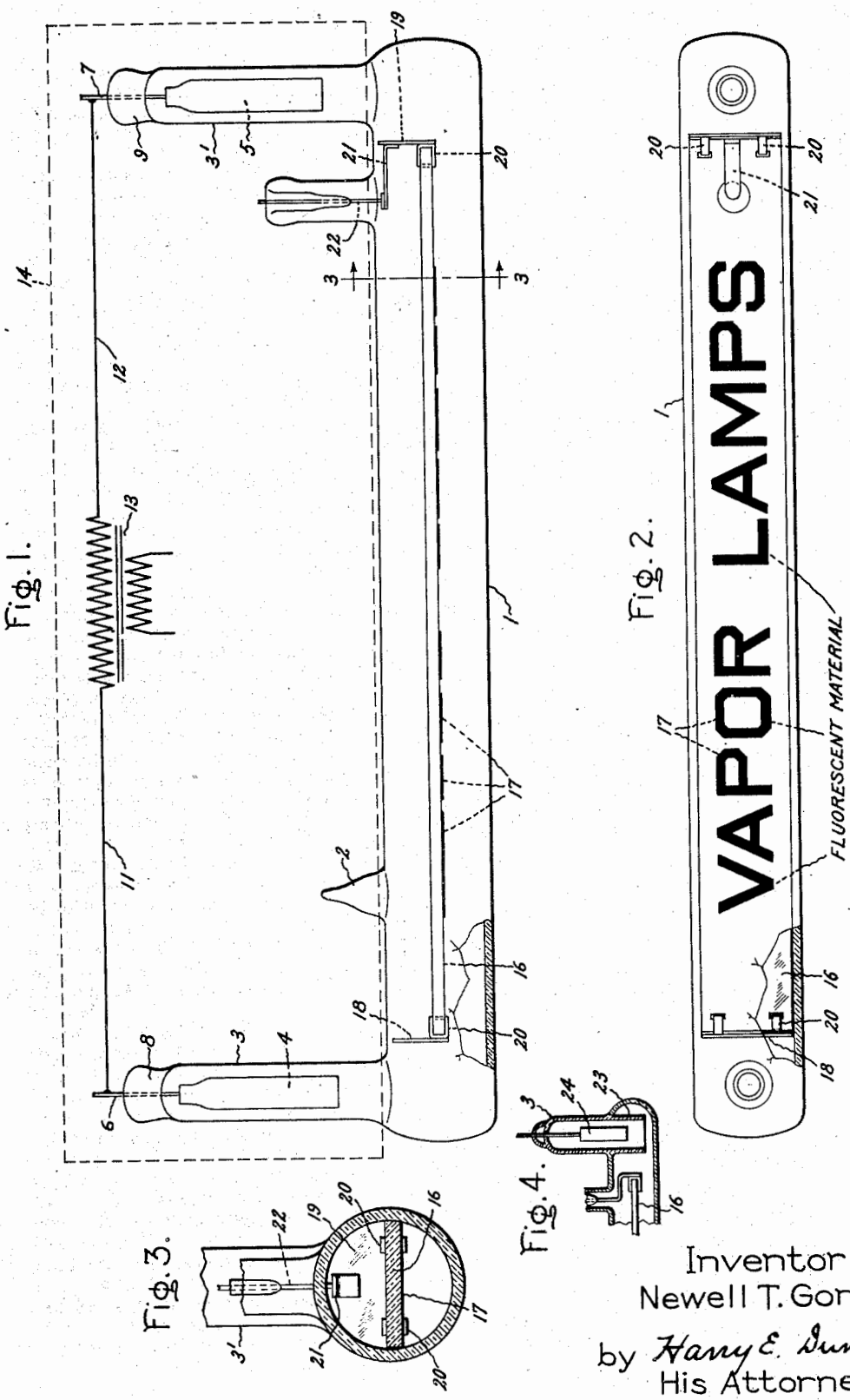

Fig. 1.

Fig. 2.

Fig. 3.

Fig. 4.

Inventor:
Newell T. Gordon,
by Harry E. Dunham
His Attorney.

Patented Oct. 31, 1939 2,177,710

UNITED STATES PATENT OFFICE

2,177,710

FLUORESCENT SIGN LAMP

Newell T. Gordon, Schenectady, N. Y., assignor to General Electric Company, a corporation of New York

Application April 22, 1938, Serial No. 203,546

4 Claims. (Cl. 176—14)

The present invention comprises an improved electric display lamp in which letters, or other sign characters, are formed of, or outlined by, flourescent materials which are caused to become luminous under the influence of an electric discharge.

It is desirable that in such a lamp the discharge itself should have little or no luminosity, and in general should be as inconspicuous as possible so as not to distract attention from the fluorescent characters.

It is also desirable that the discharge should take such path in the lamp that the fluorescent characters which are mounted inside the lamp will receive most effectively radiation from the discharge. In other words, the discharge should not follow some path in the lamp which is unfavorable to the excitation of fluorescence.

In the construction embodying my invention, both of these desired results are obtained by a simple construction. The novel features of my invention will be set forth by the accompanying claims, and will be described hereinafter in connection with the accompanying drawing.

The drawing shows in Fig. 1 a side elevation of a lamp and auxiliary apparatus; Fig. 2 is a side elevation of the lamp; Fig. 3 is a cross-section of the lamp of Fig. 1 taken on the line 3—3; and Fig. 4 illustrates in longitudinal section a modification.

The lamp shown in Fig. 1 comprises a sealed, elongated tubular envelope 1 which contains a suitable charge of gas, preferably a rare gas, such as argon or krypton, in which an electric discharge will produce but low luminosity. However, the presence of a small amount of mercury vapor is not excluded. I prefer to employ argon at a pressure within the range of about .5 to 2 mm. of mercury pressure. The envelope is given a preliminary exhaust by well understood methods, then is charged with gas at desired pressure, and finally is sealed at 2 in the usual way. At the ends of the envelope 1, electrode chambers 3, 3′ extend at right angles and have located therein electrodes 4, 5. These electrodes are mounted on leading-in conductors 6, 7, which are sealed into stems 8, 9 in the usual way. The electrodes 4, 5 are shown as representative either of the "cold" electrode type, operating with a high voltage drop, or of the oxide-coated heated electrode type, operating with a low voltage drop. As well understood, both types are suitable for the purpose of maintaining an electric discharge in an attenuated gas. For example, elongated cylinders of nickel or iron, coated with barium oxide, may be used as electrodes. The electrodes are supplied with energy by the conductors 11, 12, which are connected to a suitable source, such as the secondary winding of a transformer 13. The electrode chambers 3, 3′ and the transformer 13 are enclosed in a housing 14.

In the main portion of the envelope, a plate 16 is mounted in a longitudinal position, as best indicated in Figs. 2 and 3. On this plate, which may consist of glass, ceramic, or other suitable material, are placed desired letters or characters of fluorescent material, indicated at 17, such for example, as zinc silicate, calcium tungstate, cadmium silicate, or borate, or desired mixtures thereof. Any desired and suitable fluorescent material may be used. The space adjacent the uncoated side of the plate 16 is shut-off to the discharge by end shields 18, 19, which may consist of metal, such as nickel, or of a suitable ceramic material. These end shields are held on the plate 16 by suitable clips 20. The shield 19 (and through it the plate 16) is anchored by a support 21, which in turn is attached to a sealed-in wire 22.

When a discharge is initiated between the electrodes 4, 5, the fluorescent coating (here indicated by the legend "Vapor lamps"), glows brightly by fluorescence, the discharge passing in radiating relation in front of the fluorescent material. In the absence of the barrier shields 18, 19, the discharge would traverse the shortest path through the tube, that is, pass back of the plate 16 where its radiation would not cause fluorescence of the coating 17, or only feeble fluorescence.

As illustrated by the fragmental view of Fig. 4, the barrier for the arc discharge may assume the form of a tubular shield 23 which surrounds the electrode 24 and one side of which is transverse the space back of the plate 16. The electrode 24 in this case extends beyond the side chamber 3, so that the discharge in the absence of the barrier 23 would pass on the uncoated side of the plate 16 to a cooperating electrode (not shown). When this construction is used, the shields 18, 19 may be omitted.

In my improved lamps, the electric gas ionization discharge is nearly unnoticeable, particularly when argon is used, and the fluorescent characters stand out in bright relief, compelling attention to the sign.

What I claim as new and desire to secure by Letters Patent of the United States is:

1. A fluorescent display lamp comprising a sealed elongated container, electrodes spaced apart therein, a charge of attenuated gas therein,

a longitudinal support therein having fluorescent characters provided thereon, and barrier means located between said electrodes and extending transversely in a path between said electrodes shielded from said fluorescent characters to increase the length of the discharge path between said electrodes, whereby a low luminosity discharge between said electrodes is guided into fluorescence-exciting relation to said characters.

2. An electric display lamp comprising a sealed, transparent elongated container, electrodes adjacent opposite ends of said container, a charge of attenuated gas therein, a plate having a surface coated with fluorescent material located in a longitudinal position in said container, and leaving a space between an uncoated surface and a wall of said container and transverse barriers in said space for obstructing a low luminosity dischage between said electrodes through said space and to increase the length of the discharge path between said electrodes.

3. An electric sign lamp comprising a sealed, transparent cylindrical container, a charge of attenuated gas therein, a longitudinal partition therein, fluorescent characters coated on one surface of said partition, electrodes at opposite ends of said container and a barrier in the space adjacent the uncoated side of said partition for obstructing said space for low luminosity discharges between said electrodes and to increase the length of the discharge path between said electrodes.

4. An electric display lamp comprising a sealed elongated transparent container having a main chamber and transversely extending side chambers, a charge of argon gas therein at a pressure of about one-half to two millimeters of mercury, electrodes in said side chambers, an elongated plate in said main chamber, a coating of flourescent material on one side only of said plate and transverse shields mounted on opposite ends of said plate extending transversely thereto in a position blocking the space on the uncoated side of said plate to increase the length of the discharge path between said electrodes.

NEWELL T. GORDON.