(No Model.)

C. G. PERKINS.

CONNECTOR FOR ELECTRICAL APPLIANCES.

No. 362,108. Patented May 3, 1887.

FIG. 1.

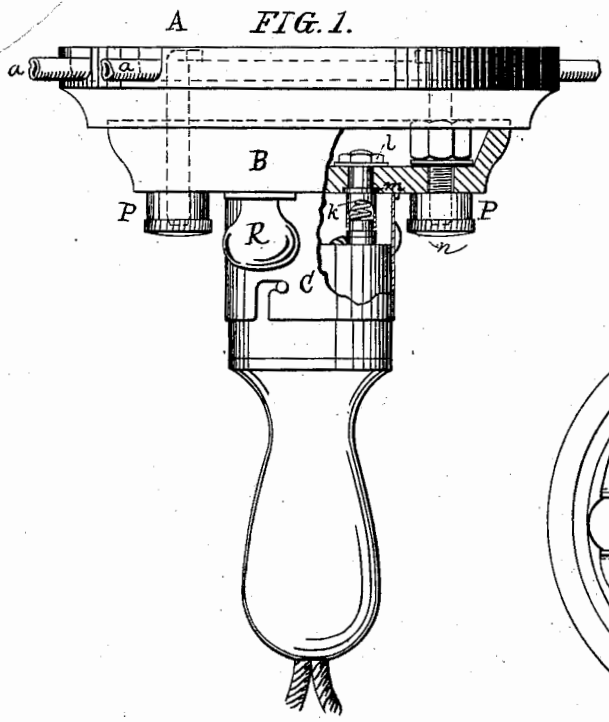

FIG. 6.

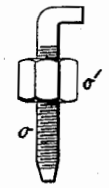

FIG. 5.

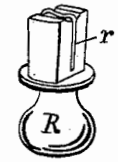

FIG. 4.

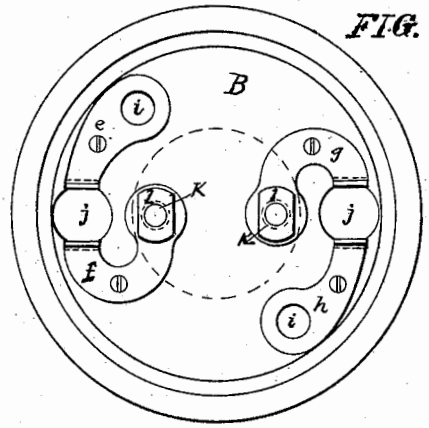

FIG. 2.

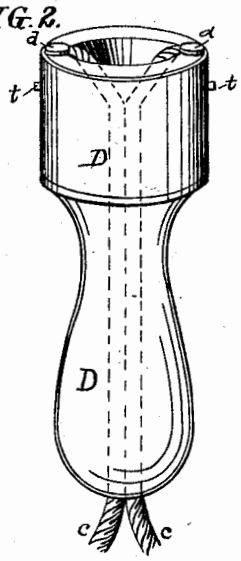

FIG. 3.

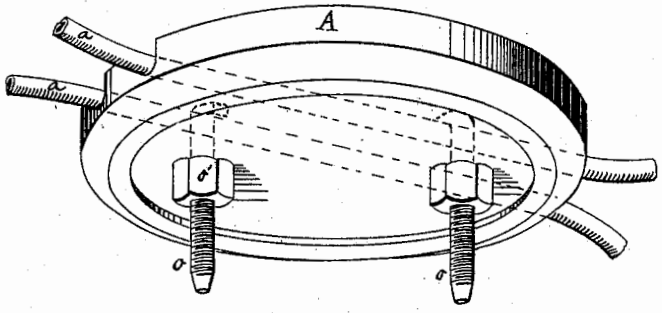

Witnesses:
F. H. Elliott.
Chas. A. Saal.

Inventor:
Charles G. Perkins.
by V. D. Stratebridge & Bro.

N. PETERS, Photo-Lithographer, Washington, D. C.

UNITED STATES PATENT OFFICE.

CHARLES G. PERKINS, OF HARTFORD, CONNECTICUT.

CONNECTOR FOR ELECTRICAL APPLIANCES.

SPECIFICATION forming part of Letters Patent No. 362,108, dated May 3, 1887.

Application filed December 18, 1886. Serial No. 221,943. (No model.)

To all whom it may concern:

Be it known that I, CHARLES G. PERKINS, a citizen of the United States, residing at Hartford, in the county of Hartford and State of Connecticut, have invented certain new and useful Improvements in Connectors for Electrical Appliances; and I do hereby declare the following to be a full, clear, and exact description of the invention, such as will enable others skilled in the art to which it appertains to make and use the same.

My invention relates especially to means for making connection between wires running along walls or ceilings and electric appliances projecting or depending from the same. The object of my invention is to provide connections which shall insure good contact, and shall at the same time be strong and comparatively free from liability to get out of order. I accomplish this result by means which are illustrated in the accompanying drawings, in which—

Figure 1 represents an elevation of my connector, some of the parts being shown in section. Fig. 2 is a perspective of an electrical appliance adapted to be used with my connector. Fig. 3 is a perspective of one part of the base for my connector. Fig. 4 is a plan of a plug that forms a portion of my connector, and Figs. 5 and 6 are detail views.

In the drawings, A is a base or support having grooves, through which electric insulated wires *a a* run. I have shown a base especially adapted to be applied to conductors running along the ceiling; but it is evident that it might also be applied to wall-conductors.

B is a cup-shaped cap or cover carrying suitable circuit-terminals, and also forming a support for a socket, C, corresponding to the usual lamp-socket. Within the hollow portion of the cap or cover B are located strips *e f g h*, which are secured to the cap or cover by suitable screws near their middle portions in such a manner that on either side of the said screws the strips pass out of direct contact with the cap or cover, and form springs for making strong contact. The strips *e* and *h* are each perforated at one end with a hole, *i*, and bent at the other end into a U shape, the body of the U extending down through holes *j j* in the cap or cover.

It should be stated that the holes *i i* in the strips *e* and *h* correspond to the similar perforations through the cover. The springs *f* and *g* support upon their inner ends hollow posts *k k*, and are formed at the other end like strips *e* and *h* into U-shaped portions, which also extend into the openings *j j*, but are located at opposite sides of those openings from the ends of the strips *e* and *h*. The hollow posts *k k* extend up through the plug B and through the inner ends of the strips *f* and *g*, and are secured by nuts *l l*. The said posts are provided with shoulders *m m*, which fit into grooves in the bottom of the cap or cover. Within the hollow posts are secured springs *n n*, for making connection with the electrical appliances, as will be described hereinafter.

I will now describe the means for making mechanical and electrical connections between the parts already described. The point having been determined on where it is desired to attach an electric appliance, the wires *a a* are bared for a very short distance and brought into the grooves in the base or support A. Screws *o o* are then applied to them in such a way that the heads of the said screws, which are flanged or bent over, as shown, catch upon the bared portions, while the body of the screws pass down through the base A. The screws *o o* are long enough to extend not only through the base A, but also through the cap or cover B, and they are so arranged that they pass through the openings *i i* in the said cover. Below the latter screw-caps P P are applied to them, and serve to hold the parts together.

It is evident that by turning the screw-caps the connection between the screws and the wires can be made as close and firm as desired. It is also evident that the connection is a very strong one, and that so long as the wires are properly supported there is no danger of the parts becoming disconnected. Upon the body of each screw *o* is a nut, *o'*, which is so adjusted as to make good contact with the ends of the springs *e* and *h*, as shown in Fig. 1. Thus far we have traced the connection from the wires to the springs *e* and *h*. To complete the connection across openings *j j* to the strips *f g* and the posts *k k*, I employ the safety-plugs R R, which are inserted from below through the openings *j j*.

Referring to Fig. 5, it will be seen that that portion of each plug R which passes through

the opening tapers slightly from its extremity inward or downward. The same portion is also provided with a very slight groove along its sides and a larger one at the top, in which lies a fusible wire, *r*. The latter is kept in place by having its ends turned into holes in the plug. When the plugs R R are pushed up into place, it is obvious that the electrical connection is made across the openings *j j* through the wires *r r*, thus completing the connection through the parts described. The plugs are kept in place by the springs bearing against their tapering surfaces.

The connections to the electrical appliances are made in any suitable manner. In Fig. 2 I show a hollow plug, D, having terminals *d d*, from which insulated wires *e e* extend. The plug is also provided on opposite sides with pins *t t*, and may be connected with the socket C by a bayonet-joint, as illustrated in Fig. 1; and when so connected the terminals *d d* will be so located as to make contact with the springs *n n* in the hollow posts *k k*. The wires *e e* extend downward to be connected with any suitable electrical appliance whatever, as a lamp.

In place of applying the plug D as described above, and leading off wires to a lamp or other electrical device, I may, of course, apply such lamp or electrical device directly to the socket C. Moreover, while I have described a connector especially adapted to ceiling-conductors, I may apply such connector to wires running along a wall or to any parallel wires, wherever located. Again, my means of connection may be applied to a single wire, if circumstances make such a thing desirable—that is to say, I do not wish to limit myself to the use of the screw *o* for making connections with a pair of wires; but I desire to cover its use with one or more wires, as the case may be.

Having now described my invention, what I claim is—

1. The combination, with a pair of wires and a base or support having grooves within which the wires lie, of screws having bent or flanged heads for catching over the wires, the said screws passing through the base, and being provided with nuts for making contact with conducting-pieces supported thereon, and screw-caps for tightening the contact with the wire, as set forth.

2. The combination, with a pair of parallel wires and a base or support having grooves in which the wires lie, of a cap or cover carrying circuit-terminals, and means for making the mechanical connection between the plug and the base, and the electrical connection between the terminals and the wires, consisting of screws *o o*, having the nuts *o′ o′*, and the screw-caps P P.

3. The combination, with a pair of wires and a base or support having grooves in which the wires lie, of a plug carrying circuit-terminals, the members being connected by a safety-plug, and mechanism, substantially as described, for making the mechanical connection between the plug and the base and the electrical connection between the terminals and the wires.

In testimony whereof I have affixed my signature in presence of two witnesses.

CHARLES G. PERKINS.

Witnesses:

WILLARD EDDY,

GABRIEL P. BEHRISCH.